22–DIP–400

Dimensions in Milimeters/inches

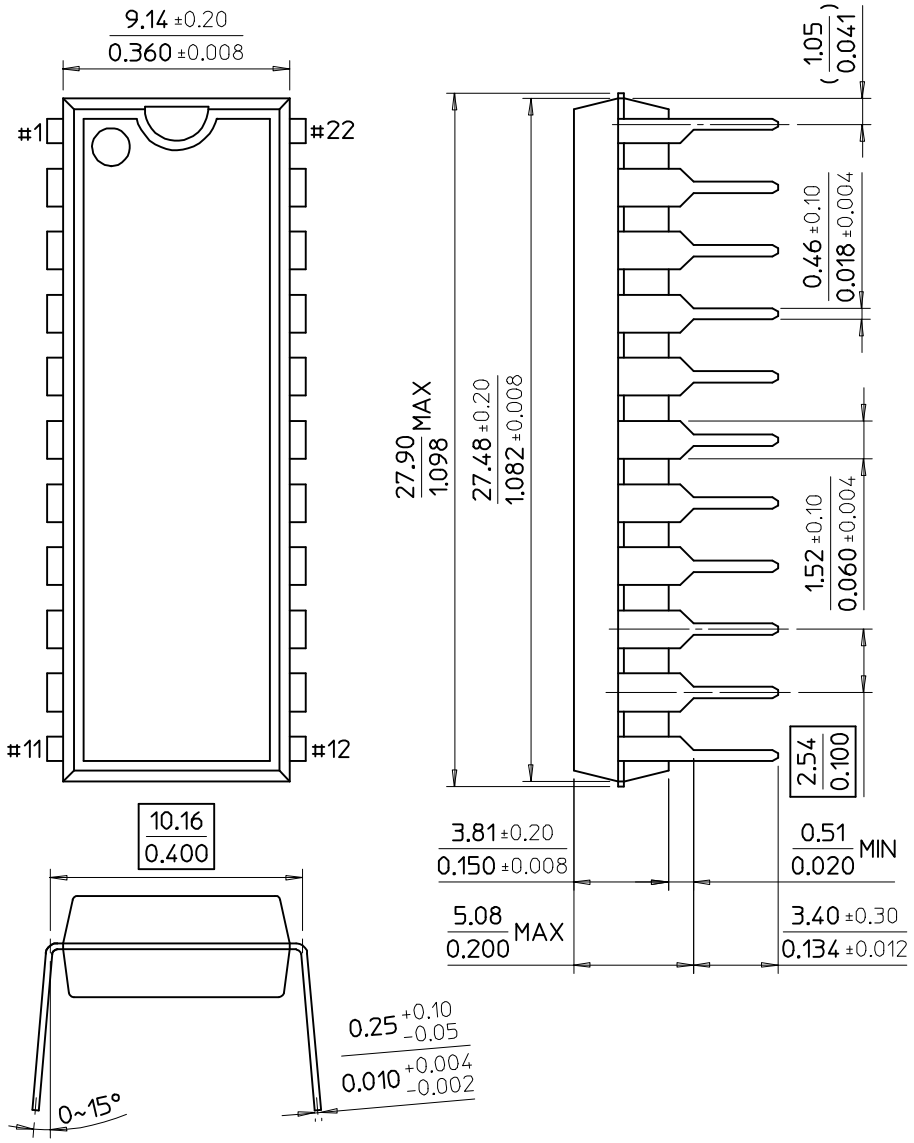

SAMSUNG ELECTRONICS CO.,LTD.